SPECIFICATION APPLIED

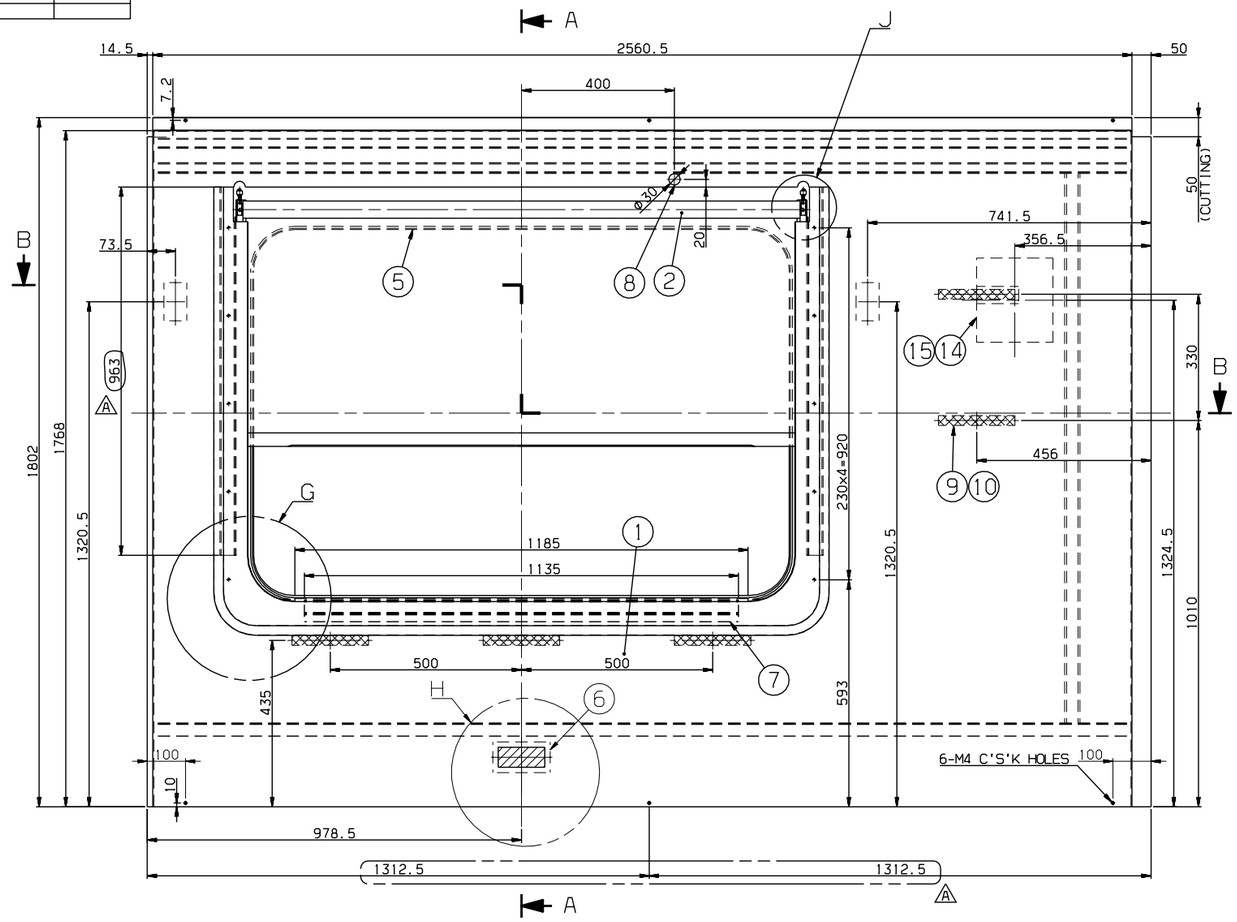

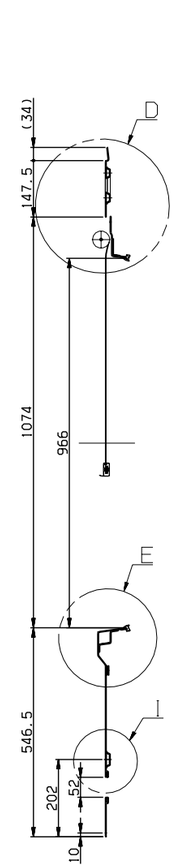

SECTION A-A

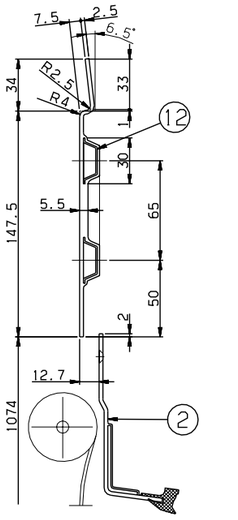

DETAIL D
SCALE=1/2

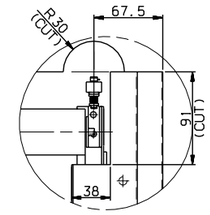

DETAIL J
SCALE=1/3

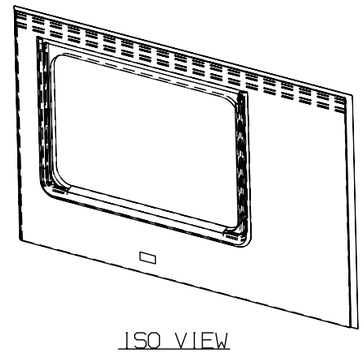

ISO VIEW

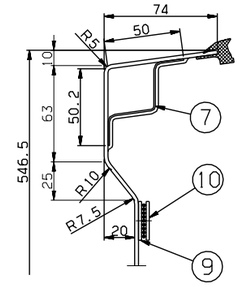

DETAIL E
SCALE=1/2

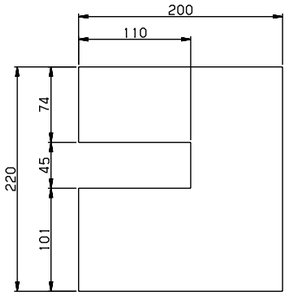

DETAIL #14&15
SCALE=1/3

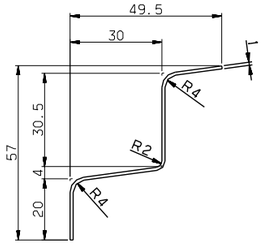

DETAIL #7
SCALE=1/1

NOTE
1. AN INTERIOR PANEL'S COLOR(RAL 7047) AND SURFACE SHALL BE MANUFACTURED AFTER SAMPLE'S APPROVAL BY CUSTOMER
2. PART 5 SHALL BE CUT ADEQUATELY AND USED
3. PART 8 IS TO PROTECT.
4. PART 2 SHALL BE WELL OPERATED UNDER CONDITION OF ASSEMBLY
5. PART 9 SHALL BE FIXED ON THE PART 1, AND PART 10 SHALL BE DELIVERED SEPERATETLY
6. THE INTERFACE BETWEEN PART 1 AND PART 2 SHALL BE STRONGLY SEALED
A 7. PART 4 SHOULD BE APPLIED WITH PART 16.

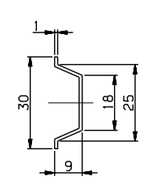

DETAIL #12
SCALE=1/1

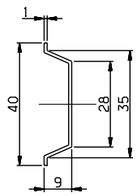

DETAIL #11
SCALE=1/1

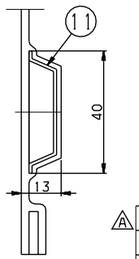

DETAIL I
SCALE=1/1

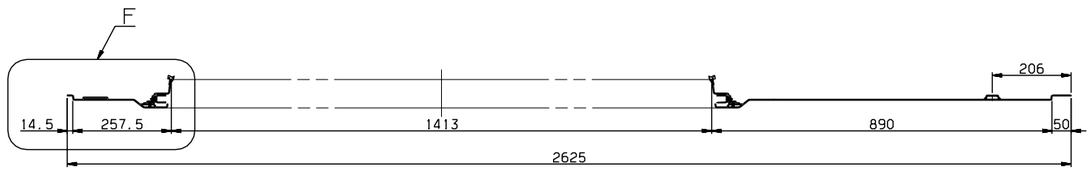

SECTION B-B

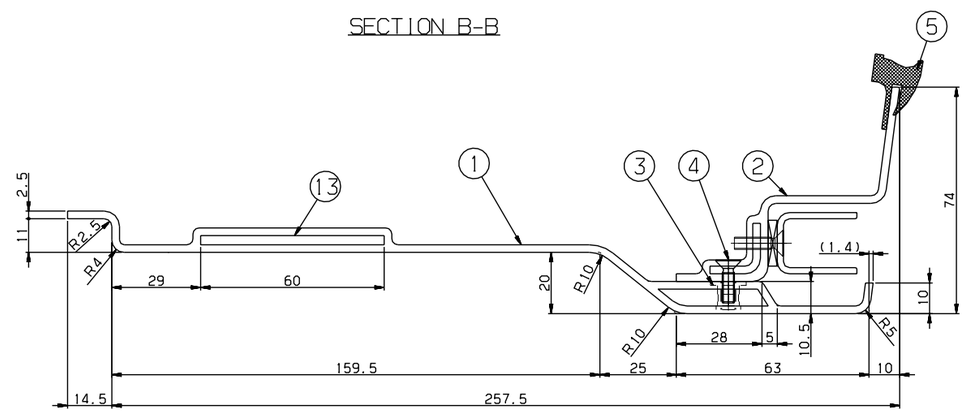

DETAIL F
SCALE=1/1

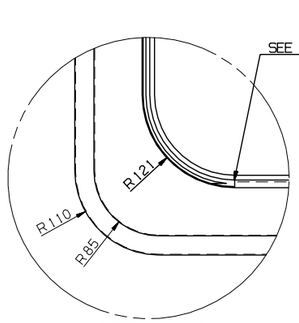

DETAIL G
SCALE=1/4

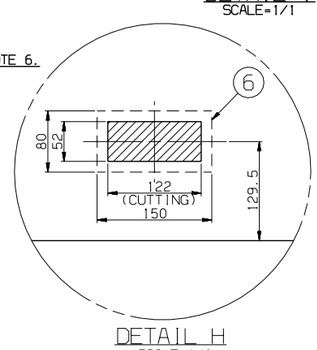

DETAIL H
SCALE=1/4

	NO.	PART NO.	DESCRIPTION	MATERIAL	Q'TY	W.T	REMARKS
A	16	CP910004-406	ADHESIVE	ASSY	1		LOCTITE 242
	15	RFP51103EJ0-015	PACKING	CR	1		PL.T2x220x200 MS39000-004(SC70-F2(CR))
	14	RFP51103EJ0-014	PACKING	CR	1		PL.T2x220x200 MS39000-004(SC70-F2(CR))
	13	RFP51103EJ0-013	SEAT.TAP	SUS304	2		PL T3x100x60
	12	RFP51103EJ0-012	STIFFENER	A1050P	2		T1
	11	RFP51103EJ0-011	STIFFENER	A1050P	2		T1
	10	RFP51103EJ0-010	DUAL_LOCK,FASTENER	ASSY	5		3M,SJ-3550 L=200
	9	RFP51103EJ0-009	DUAL_LOCK,FASTENER	ASSY	5		3M,SJ-3551 L=200
	8	RFP90013AN0	RUBBER BUSH	ASSY	1		F2.2332
	7	RFP51103EJ0-007	STIFFENER	SUS304	1		T1,L=1135
	6	RFP51103EJ0-006	SEAT.TAP	SUS304	1		PL T3x150x80
	5	RFP51103EJ0-005	RUBBER,SECTION	ASSY	1		RFP51011AN0,L=4600
	4	RS60607-098S	SCREW,F.H	SUS304	10		M4x14
	3	RFP51103EJ0-003	NUTSERT	SUS304	10		M4
	2	RFP51009AN0	PANEL,BLIND WINDOW	ASSY	1		
	1	RFP51103EJ0-001	PANEL	FRP	1		T2.5

승인 APP	검도 CHK	설계 DGN	제도 DRG
JeongYul Lee 2014.10.10	KeongBong Park 2014.10.10	HeonUk Lee 2014.10.10	HeeSook Jeong 2014.10.10

재질 MAT'L ASSY
품명중량 G.W
도면 번호 DRG. NO RFP51103EJ0 Ver. 00 Rev. -A
RSD1402
RFP-
난-PRJT
일반부품
CATIA
척도 SCALE 1/8
매수 SHEET 1 of 1
SIZE A1
참조REF. NO.

TITLE: WINDOW, MASK, TYPE C

HYUNDAI Rotem 현대로템주식회사

MARK	DATE	DETAIL OF REVISION(E.C ZONE)	E.C NO.	DGN	CHK	APP
Ax4	2014.12.18	ADDED PART NO. #16 & DIMENSION	RSD1402-U071	H.U.LEE	K.B.PARK	J.Y.LEE

본 도면은 당사 재산권에 속하므로 무단복사/배포 금지. PROPERTY OF ISSUING ENTITY, CANNOT BE DISTRIBUTED OR REPRODUCED WITHOUT AUTHORIZATION.

일반공차 GENERAL TOLERANCE			
치수 DIMENSION	~ 40	2	4
	~ 30	2	3
	~ 10	1	1.5
	< 1	0.5	1
절삭 CUTTING	~ 3150	-	7
	~ 1600	4	5
	~ 800	3	4
	~ 400	2	3
	~ 200	1.5	2
	~ 100	1	1.5
등급 GRADE		A	B
주철, 주강품 CASTING (±)			
	~ 20M	8	14
	~ 15M	7	12
	~ 12M	6	10
	~ 8M	5	8
	~ 4M	4	6
	~ 2M	3	4
	~ 1M	2	3
	~ 315	1	2
	~ 120	1	2
	~ 30	1	1
등급 GRADE		A	B
용접 가공 WELDING (±)			
	~ 20M	-	6.0
	~ 15M	-	5.0
	~ 12M	-	4.0
	~ 8M	-	3.0
	~ 4M	0.8	2.0
	~ 2M	0.5	1.2
	~ 1M	0.3	0.8
	~ 315	0.2	0.5
	~ 120	0.15	0.3
	~ 30	0.1	0.2
	~ 6	0.05	0.1
등급 GRADE		A	B
기계 가공품 MACHINING (±)			

등급 GRADE		A	B	C
주철, 주강품 CASTING (±)				
	~ 20M	8	14	24
	~ 15M	7	12	21
	~ 12M	6	10	18
	~ 8M	5	8	14
	~ 4M	4	6	11
	~ 2M	3	4	8
	~ 1M	2	3	6
	~ 315	1	2	4
	~ 120	1	2	3
	~ 30	1	1	1
등급 GRADE		A	B	C
용접 가공 WELDING (±)				
	~ 20M	-	6.0	8.0
	~ 15M	-	5.0	7.0
	~ 12M	-	4.0	6.0
	~ 8M	-	3.0	5.0
	~ 4M	0.8	2.0	4.0
	~ 2M	0.5	1.2	3.0
	~ 1M	0.3	0.8	2.0
	~ 315	0.2	0.5	1.2
	~ 120	0.15	0.3	0.8
	~ 30	0.1	0.2	0.5
	~ 6	0.05	0.1	0.2
등급 GRADE		A	B	C
기계 가공품 MACHINING (±)				
일반공차 GENERAL TOLERANCE				